volkano®

SOLACE

10 000 mAh Power Bank with Built-in USB-C & Lightning Cable

INSTRUCTION MANUAL

Please read these instructions carefully and retain them for future reference.

RoHS

VK-9039-PK/RG

CONTENTS

Highlights.....3
Package Contents.....3
Specifications.....3
Identifying Parts.....4
Charging the Power Bank.....5
Charging the Your Device.....6
Disclaimer.....6
Cleaning and Care Instructions - General.....7
Safety Precaution.....7
Environmentally Friendly Disposal.....8
Warranty.....9

HIGHLIGHTS

- Lithium Polymer Battery
- Simultaneously Charge Multiple Devices
- 20 W PD USB-C Output
- 22.5 W USB-A Super Quick Charge
- Digital Display
- Built-In Charging Cable

PACKAGE CONTENTS

- Volkano Solace Series 10 000 mAh Power Bank with Built-in USB-C & Lightning Cable
- USB-C Charging Cable
- Instruction Manual

SPECIFICATIONS

• Material	ABS
• Capacity	3.85V 10000mAh 38.5Wh
• USB-C Input	5V3A,9V2A,12V1.5A
• USB-C Output	5V3A,9V2.22A,12V1.67A
• USB Output	5V3A,9V2A,10V2.25A,12V1.5A
• USB-C OUT(Cable)	5V3A,9V2.22A,12V1.67A
• Lightning OUT(Cable)	5V2.4A
• Dimensions	76x63.5x26mm
• Weight	170g

IDENTIFYING PARTS

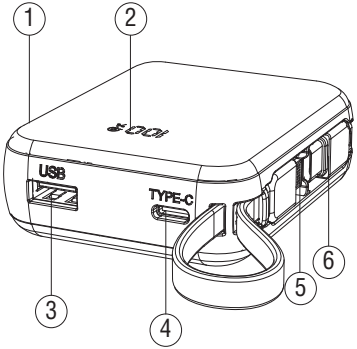

1. Power Button
2. Digital Display
3. USB-A Output Port
4. USB-C Input and Output Port
5. Lightning Output Cable
6. USB-C Output Cable

INSTRUCTIONS FOR USE

CHARGING THE POWER BANK

1. Insert the USB-C connector of the supplied cable into USB-C port of the power bank.
2. The power bank can be charged directly through the mains socket outlet using a USB charger (not supplied).
3. If you are using a computer / laptop, it could take longer to charge as the maximum output load from USB 2.0 is 0.5 A. Use a USB 3.0 Port to charge faster.
4. Press the power button and the digital display will light up to show how much charge the power bank has left.
5. The digital display will go from 100% to 0%- when it is around 0%, this means that the power is low; please recharge.
6. If the power bank is switched on but is not being used, it will automatically switch off after approximately 35 seconds.
7. When in fast charge mode, a green lightning symbol will display (requires a matching charge cable and adaptor that supports fast charge)

CHARGING THE YOUR DEVICE

1. Insert the USB-C connector of the supplied charging cable into the USB-C output port on the power bank.
2. Insert the cable's USB-C connector into your device's charging port.

Note: If your device is not compatible with the USB-C connector, you can use the charge cable supplied with your device.

3. The digital display will light up, indicating the power bank's remaining charge.
4. You can use the USB-C or Lightning cable built-in the power bank to charge your device.

Note: The digital displays the green lightening symbol when the power bank charges the phone with the fast charge protocol.

DISCLAIMER

All product and company names are trademarks™ or registered® trademarks of their respective holders. Use of them does not imply any affiliation with or endorsement by them.

CLEANING AND CARE INSTRUCTIONS - GENERAL

- **Before Cleaning:** Ensure that your Volkano Solace Series 10 000 mAh Power Bank is turned off and disconnected from a USB cable before cleaning or maintaining it.
- **Cleaning:** Wipe down the surface of your Power Bank using a soft, slightly damp cloth.
- Do not use any harsh or abrasive cleaning chemicals or materials on your Power Bank as doing so may damage or scratch the surface finish.
- Do not store in temperatures over 60°C. Do not expose the battery to excessive heat such as sunshine, fire or the like. Store in a cool, dry place.

SAFETY PRECAUTION

- Ensure responsible use of this power bank.
- Unplug the power bank when not in use.
- Do not attempt to use this power bank when performing tasks that require your full attention.
- Do not expose this power bank or any of its components to water, fire, high temperatures or damp areas.
- Do not disassemble this power bank.
- Keep out of reach of children.
- Operate between 0~40°C.
- Do not cover the power bank i.e.: use beneath pillows or blankets.
- Do not store in temperatures over 140 °F (60 °C).

ENVIRONMENTALLY FRIENDLY DISPOSAL

IMPORTANT INFORMATION FOR CORRECT DISPOSAL OF THE PRODUCT IN ACCORDANCE WITH THE SOUTH AFRICAN DIRECTIVE ON WASTE ELECTRICAL AND ELECTRONIC EQUIPMENT.

- At the end of its working life, the product must not be disposed of as urban waste. It must be taken to a special local authority differentiated waste collection centre or to a dealer providing this service. Disposing of a household appliance separately avoids possible negative consequences for the environment and health deriving from inappropriate disposal. It enables the constituent materials to be recovered to obtain significant savings in energy and resources. As a reminder of the need to dispose of household appliances separately, the product is marked with a crossed-out wheeled dustbin.
- Never dispose of used electronics with ordinary solid waste since they contain toxic substances.
- Always dispose of used electronics in accordance with the prevailing community regulations that apply to the disposal of electronics. Please dispose of the device in a waste bin for electric devices.

WARNING	Lithium-ion Batteries and/or products that contain Lithium-ion Batteries can expose you to chemicals including cobalt lithium nickel oxide, and nickel, which are known to the State of California to cause cancer and birth defects or other reproductive harm. For more information go to www.P65Warning.ca.gov.

WARRANTY

The Volkano Solace Series 10 000 mAh Power Bank has a standard 2-year limited warranty against manufacturing defects and faults. Should this product be unboxed with any faulty parts, poor finishing or visible damage or fail to perform due to a manufacturing defect or poor workmanship, please return it with your proof of purchase (till slip or invoice) to the store of purchase for an exchange, or repair, depending on the store's returns policy.

This warranty commences from the date of purchase.
Kindly retain your proof of purchase and the packaging for your warranty period.

NOTE:
The Warranty does not apply to a product that:

a. Has failed due to excessive wear and tear beyond what is considered reasonable.
b. Has been misused or neglected.
c. Has been damaged accidentally or by Force Majeure, including fire and flooding.
d. Has been used or operated contrary to operating or maintenance instructions outlined in this manual.

The Store of Purchase / Seller can only accept returned products that have been returned in accordance with this warranty or which follow their own Returns Policy. Please refer to the Store of Purchase / Sellers Returns Policy for details.

Please contact the store of purchase if you require further assistance or have any questions about your warranty.